Careon
HEALTHCARE SOLUTIONS
Maintaining the Thread of Life

A

General care product

- **Professional Apparels**
- **Patient Care Products**
- **Head Wear**
- **Foot Wear**
- **Equipment Covers**

www.careonhealthcare.com

PROFESSIONAL APPARELS

COVERALL

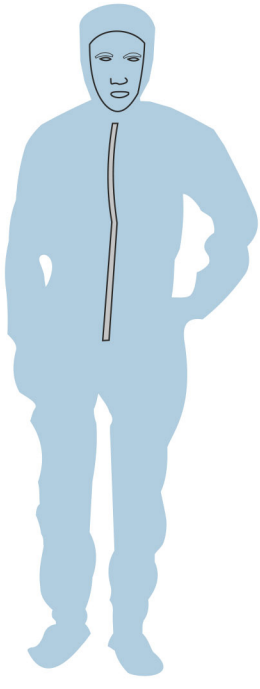

Product Code #	Description	Size(cm)
CR 143027-051 CR 143027-052 CR 143027-053	Coverall	Small Medium Large

PATIENT GOWN

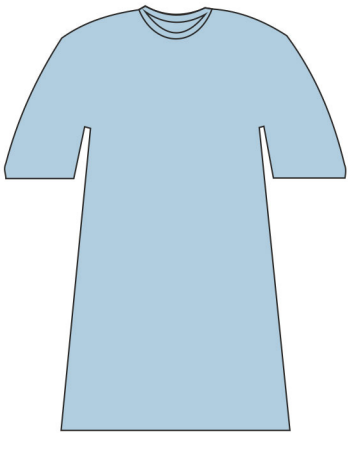

Product Code #	Description	Size(cm)
CR 143048-002 CR 143048-003 CR 143048-004	Patient Gown	Small Medium Large

APRON

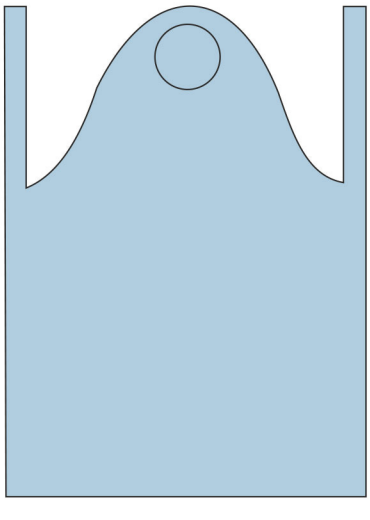

Product Code #	Description	Size(cm)
CR 143005-001 CR 143005-002 CR 143005-003	Apron	Small Medium Large

Fabric Reinforced Adhesive Tube Holder Plastic Incise Mat

Customized Packs and Drapes available upon your request

SHOE COVER

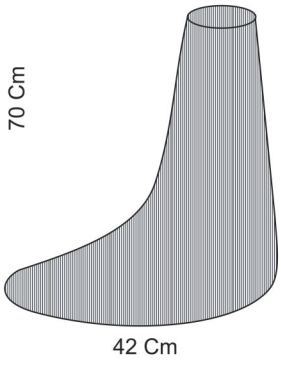

Product Code #	Description	Size(cm)
CC 142035-006	Shoe Cover • Latex Free Elastic • Closure	70x42

CLING DRAPE

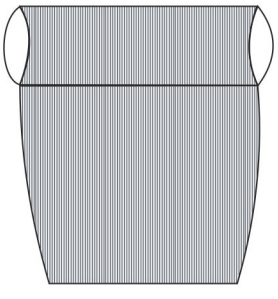

Product Code #	Description	Size(cm)
CR 143013-000	Cling Drape	000

CAUTERY BAG

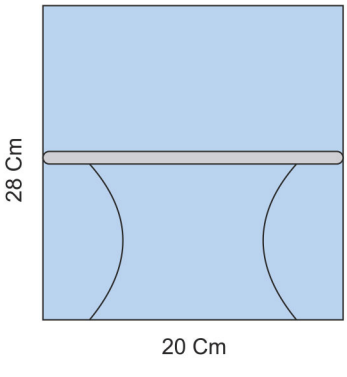

Product Code #	Description	Size(cm)
CC 142002-000	Cautery Bag	28x20

CAMERA COVER

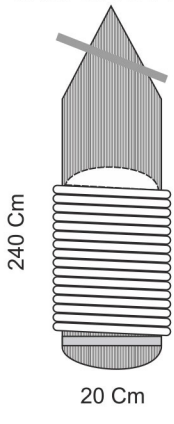

Product Code #	Description	Size(cm)
CR 143010-002	Camera Cover • Card Board Support • Adhesive with Release	20x240

Customized Packs and Drapes available upon your request

C-ARM COVER

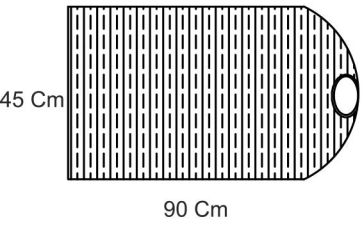

Product Code #	Description	Size(cm)
CC 142001-000	C-Arm Cover • Latex free elastic closure	45x90

MICROSCOPIC COVER

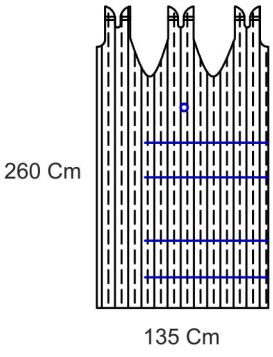

Product Code #	Description	Size(cm)
CC 142028-004	Microscopic Cover • With elastomeric Lens fittings • With securing tape • With elastic gathering strap	135x260

MAYO STAND COVER

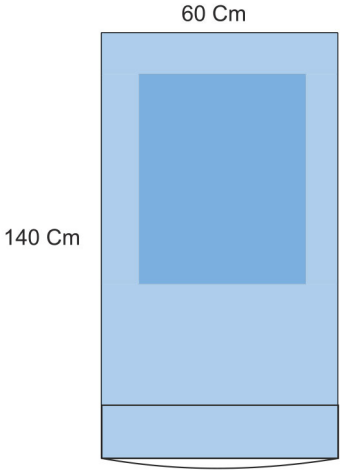

Product Code #	Description	Size(cm)
CR 143039-004	Mayo Stand Cover • 50x66 SMS reinforcement	60x140

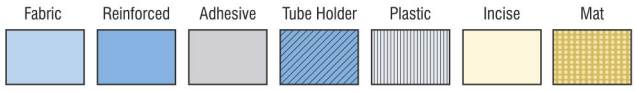

Customized Packs and Drapes available upon your request

INSTRUMENT TROLLEY SHEET

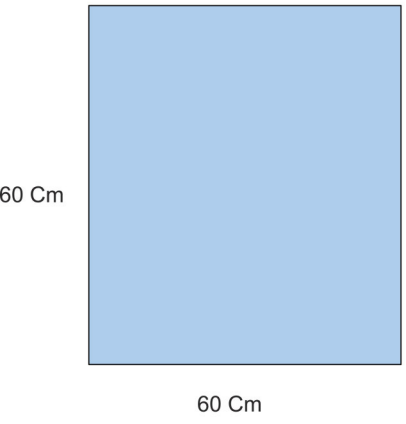

Product Code #	Description	Size(cm)
040-060-060S	Trolley Sheet	60x60

DAITHERMY BAG

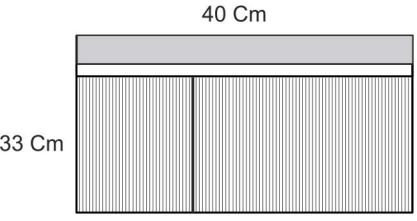

Product Code #	Description	Size(cm)
CC 142002-001	Daithermy Bag • Adhesive	40x33

CAUTRY BAG

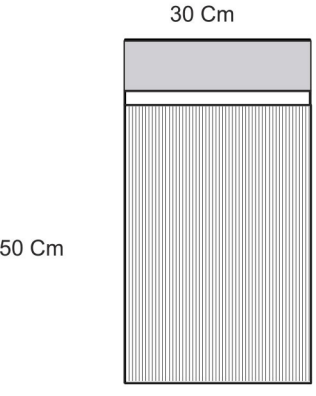

Product Code #	Description	Size(cm)
CC 142002-002	Cautry Bag • Adhesive	30x50

Fabric Reinforced Adhesive Tube Holder Plastic Incise Mat

Customized Packs and Drapes available upon your request

FLUROSCOPY COVER

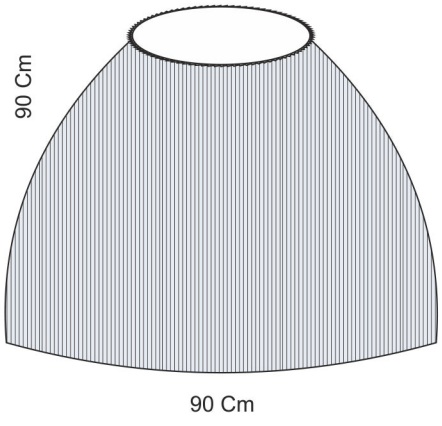

Product Code #	Description	Size(cm)
CC 142014-003	Fluroscopy Cover • Latex Free Elastic • Closure	90x90

ANGIO PROTECTION COVER

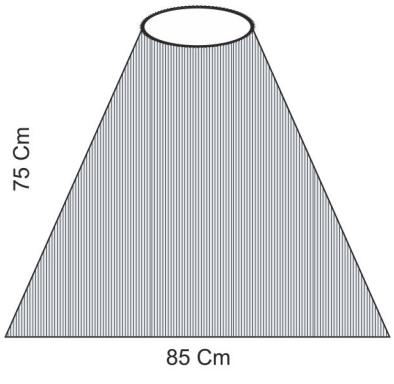

Product Code #	Description	Size(cm)
CC 142014-000	Angio Protection Cover • Latex Free Elastic • Closure	85x75

TUBE HOLDER WITH VELCRO

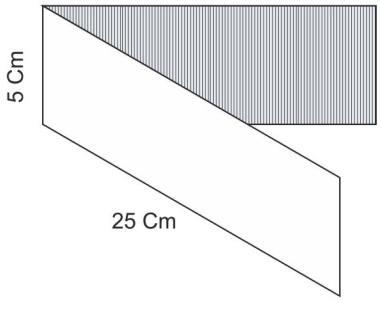

Product Code #	Description	Size(cm)
CR 143086-002	Tube Holder with Velcro • Adhesive • Velcro	5x25

C-ARM COVER

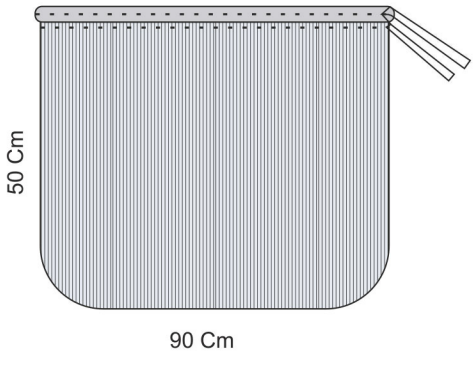

Product Code #	Description	Size(cm)
CC 142001-002	C-Arm Cover • Adhesive • Velcro	50x90

Fabric | Reinforced | Adhesive | Tube Holder | Plastic | Incise | Mat

Customized Packs and Drapes available upon your request